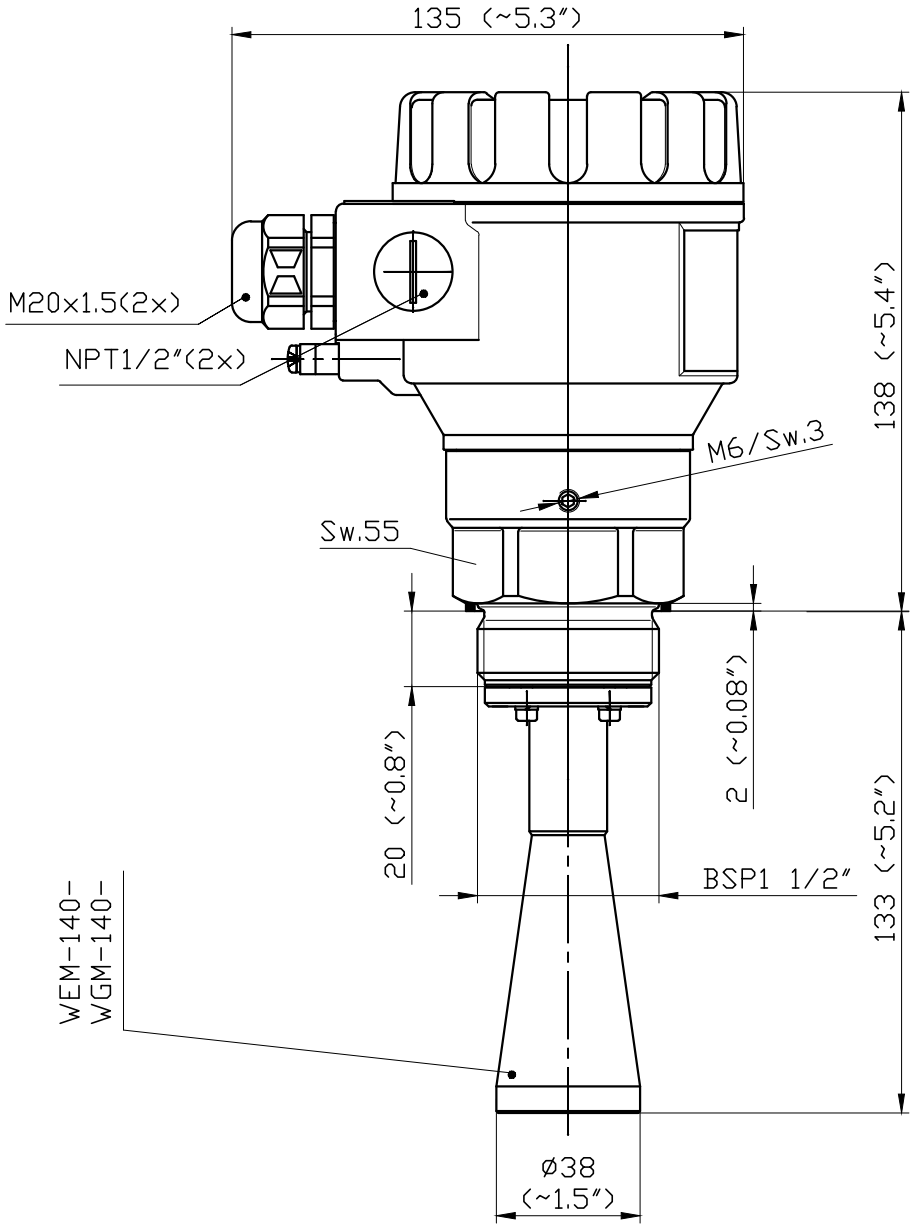

This drawing remains property of Nivelco Control Co. it may be neither copied nor informed to third persons or competitors without our approval.

NIVELCO
Process Control Co.
H-1043 BUDAPEST,
DUGONICS U. 11.
www.nivelco.com

Description:

PiloTREK W-100
Plastic housing 1 1/2"
with st. steel horn antenna

Scale:	Size of origin:
M1:2	A4
Revision: 1	Date: 08.2013
Drawing No.	
WEM-140-4	