Position "A"

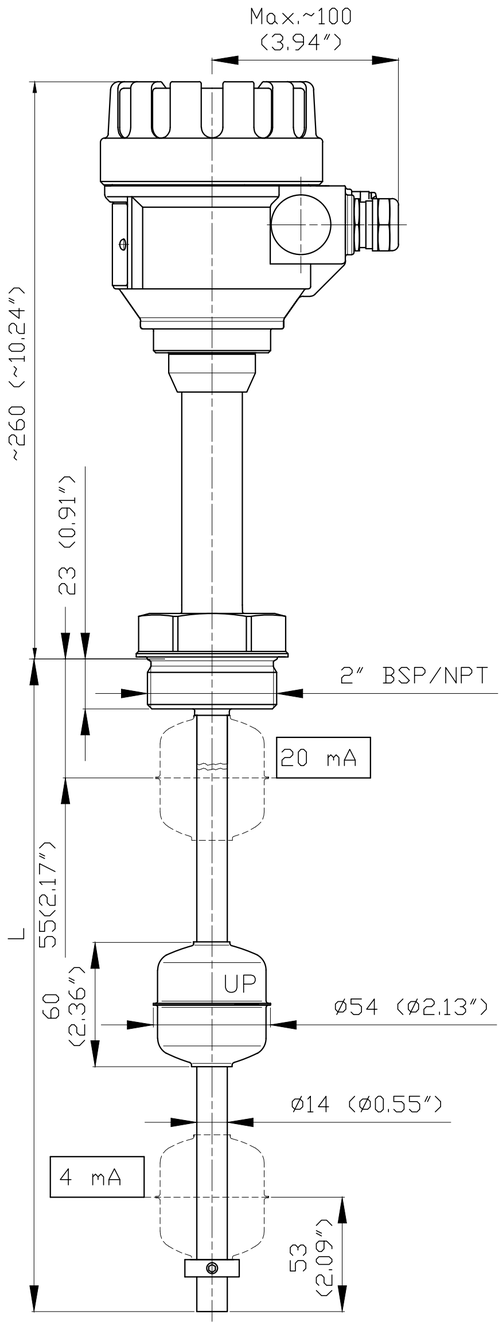

Position "B"

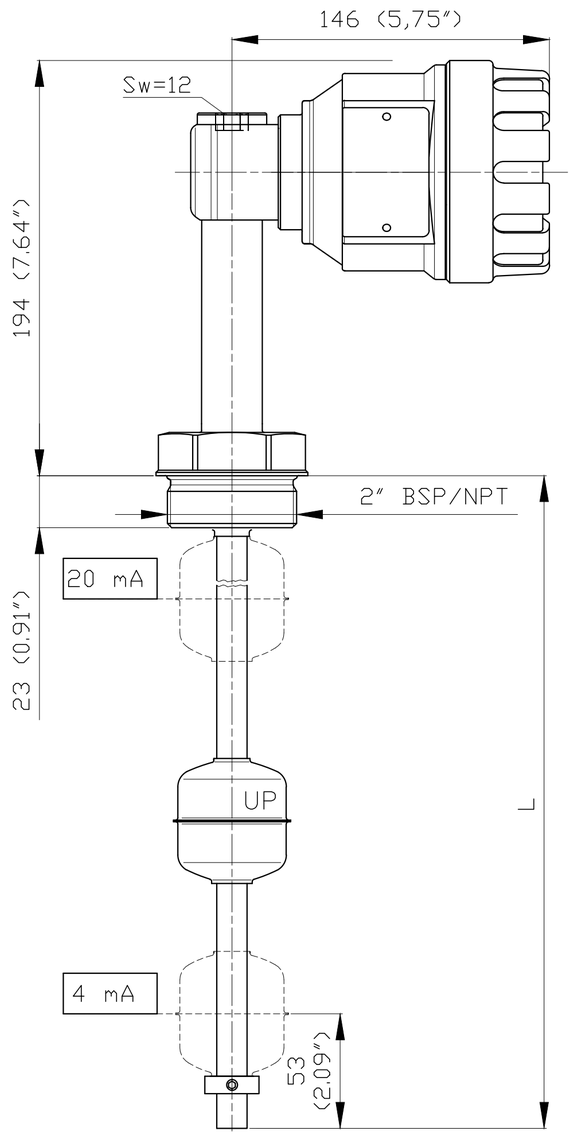

This drawing remains property of Nivelco Control Co. it may be neither copied nor informed to third persons or competitors without our approval.

NIVELCO
Process Control Co.
H-1043 BUDAPEST,
DUGONICS U. 11.
www.nivelco.com

Description:
NIVOTRACK M-500
Magnetostrictive Level Transmitter
rigid tube sensor, 2" BSP/NPT, Ex d

Scale:	Size of origin:
M1:2	A2
Revision: 1	Date: 11.2013

Drawing No.
MBC/MBG-5__